Hackathon

Task Description

The objective of the task is to design an energy-efficient way to control building systems. Indoor climate in buildings is maintained using devices such as air handling units and fan coil units. These systems can be controlled with different strategies:

- ON/OFF
- Scheduled operation
- Demand-based control

The main goal is to provide good indoor conditions. This usually means maintaining a comfortable indoor temperature and ensuring good air quality, especially keeping CO_2 levels at an acceptable level. Indoor conditions are influenced not only by the devices themselves, but also by internal and external factors. For example, the number of people in a space has a direct impact on CO_2 levels, and outdoor weather conditions affect heating and cooling needs.

Target Building

Building: 1-story, 5 thermal zones (4 exterior + 1 interior), with total floor area of

5000 ft^2/ 463.60 m^2

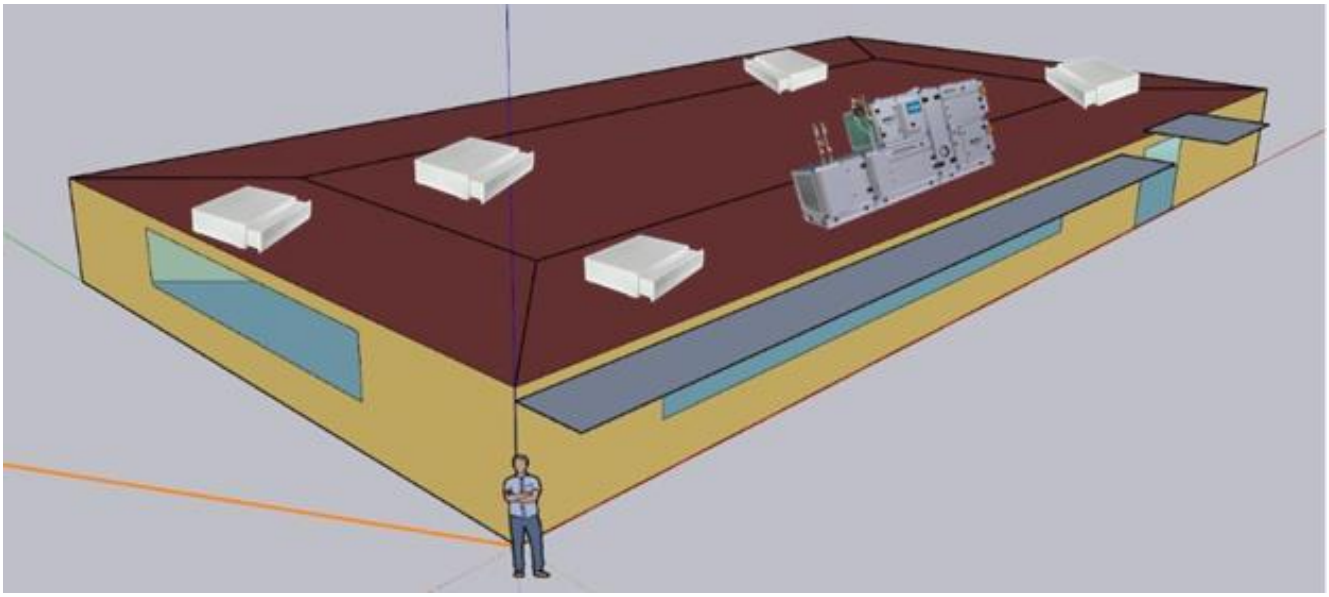

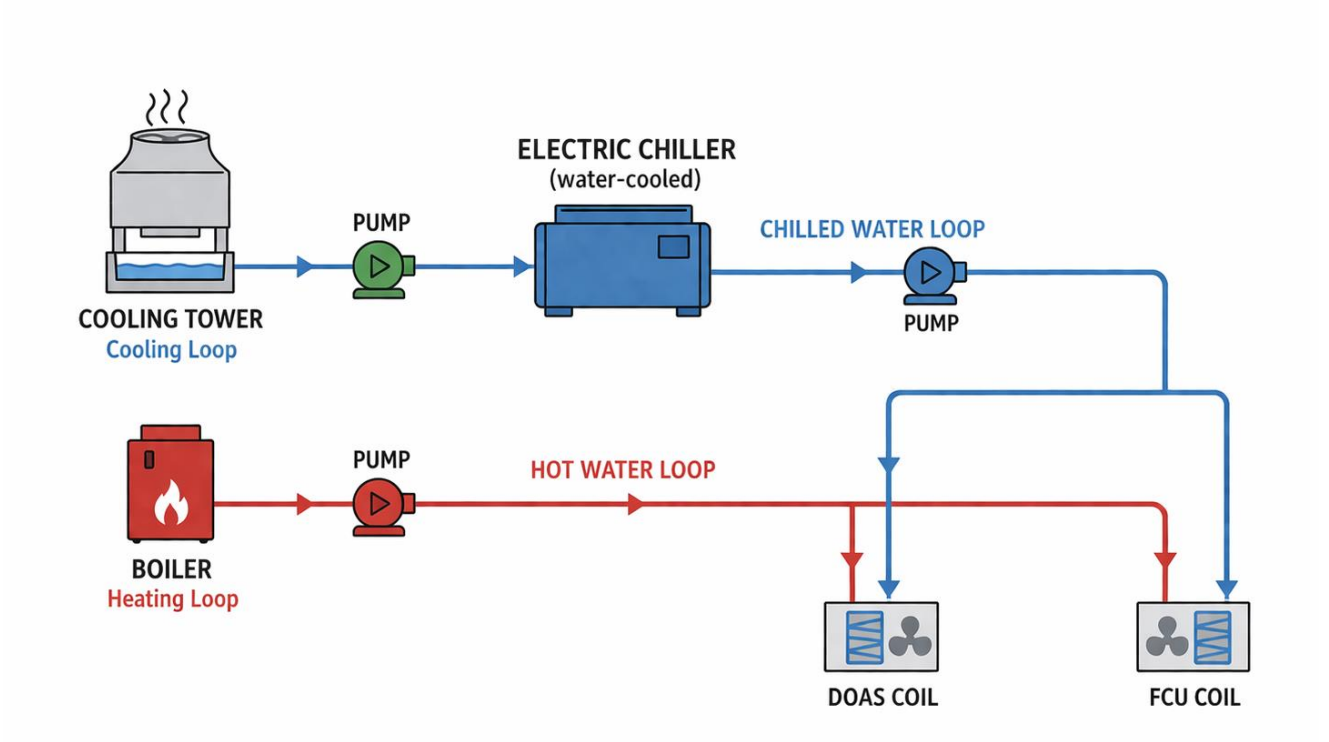
ELECTRIC CHILLER
(water-cooled)
PUMP
CHILLED WATER LOOP
COOLING TOWER
Cooling Loop
PUMP
PUMP
HOT WATER LOOP
BOILER
Heating Loop
DOAS COIL
FCU COIL

System Overview

The building uses a centralized HVAC system consisting of:

- one **Dedicated Outdoor Air System (DOAS) as the air handling unit (AHU)**
- five **fan coil units (FCUs)** (one per zone)
- a **central plant** for heating and cooling

The DOAS supplies fresh air to all zones, while the FCUs handle local temperature control within each space.

Central Plant System

Heating and cooling are generated centrally and distributed through water loops:

- The **boiler** produces hot water, which is sent to the heating coils in both the DOAS and FCUs.
- The **electric chiller** produces chilled water, which is sent to the cooling coils in the DOAS and FCUs.
- The **cooling tower** removes heat from the chiller through the condenser loop and rejects it outdoors.
- **Pumps** circulate water through all loops (heating, cooling, and condenser).

A **heat recovery unit** improves efficiency by transferring heat (and some moisture) from exhaust air to incoming outdoor air without mixing them. This reduces heating and cooling demand, and it can be bypassed when conditions make heat recovery unnecessary.

The **return plenum** collects air from all zones and directs it back to the system for heat recovery and exhaust, enabling centralized handling of return air.

Fan Coil Units

Fan coil units are used to heat or cool the space where they are installed. They work by circulating indoor air, adjusting its temperature, and then supplying it back into the room.

The main adjustable settings are the heating and cooling setpoints, and in some cases the airflow rate.

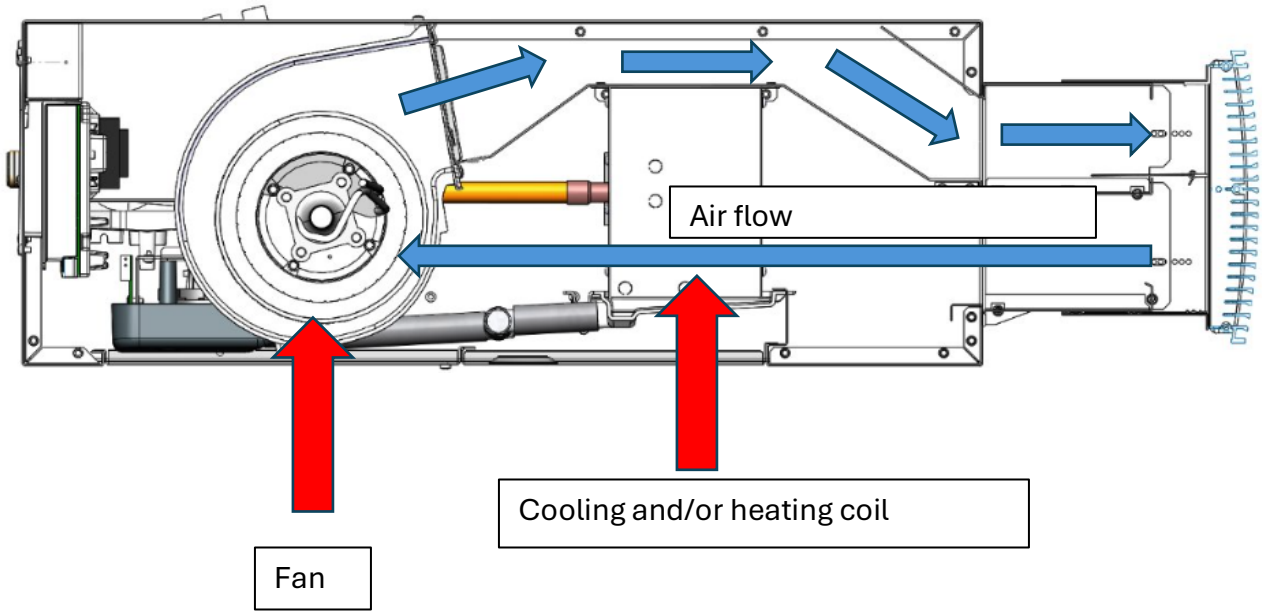

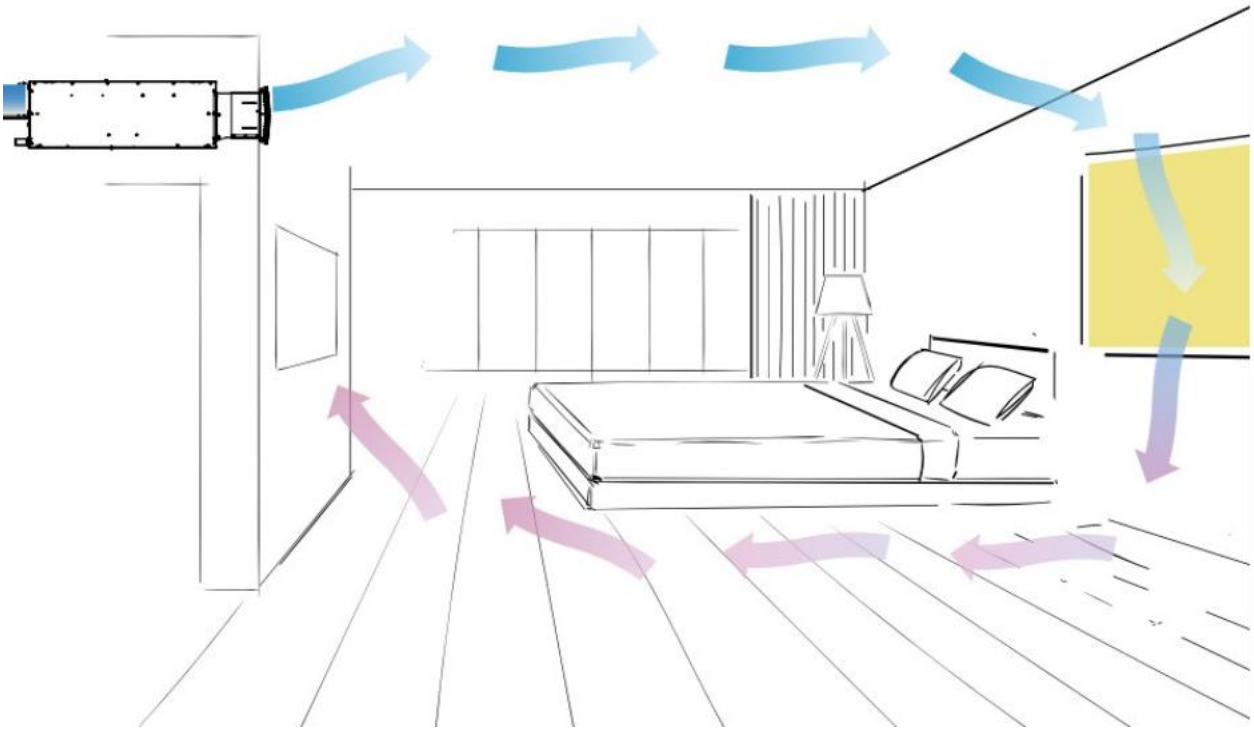

Air Handling Unit

The air handling unit is responsible for bringing fresh outdoor air into the building and removing stale air. It filters and conditions the air before supplying it to indoor spaces. Key adjustable parameters include the supply air flow rate and supply air temperature.

Air flow process:

[Outside Air] → [Heat Recovery] → [Outdoor Air Mixer] → [Cooling Coil] → [Heating Coil] → [Supply Fan] → [Zones]

↓

[FCUs]

↓

[Zone Returns] → [Return Plenum] → [Heat Recovery (exhaust side)] → Exhaust

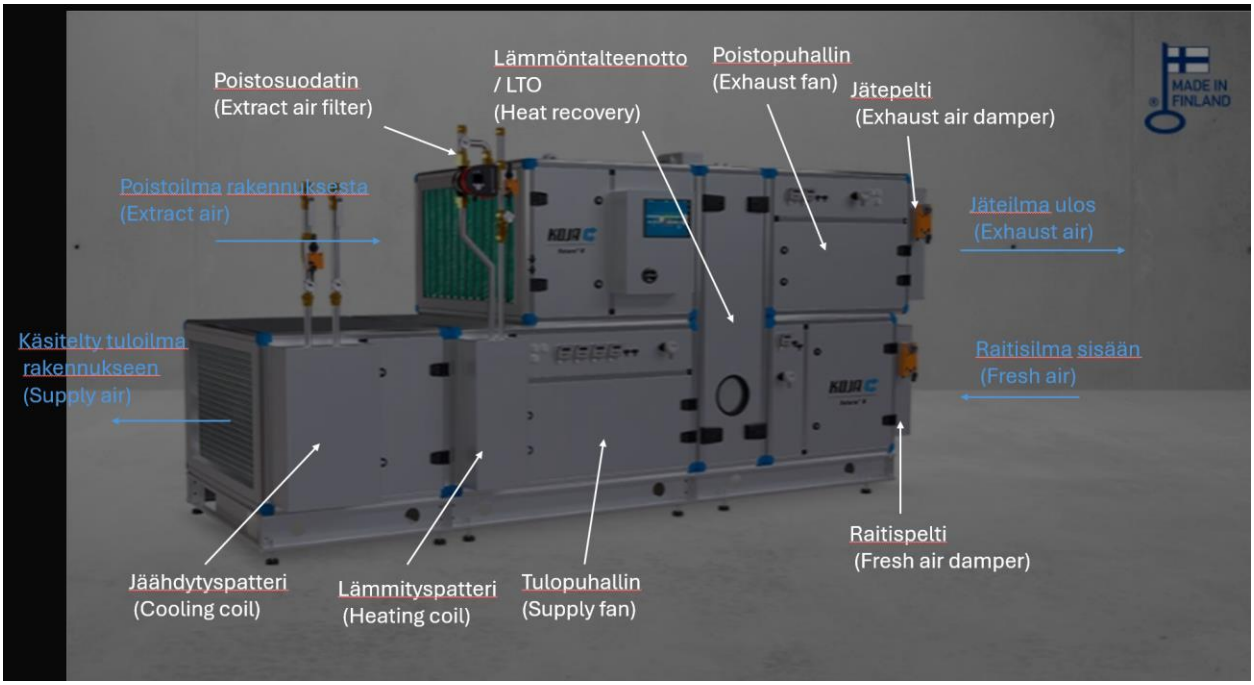

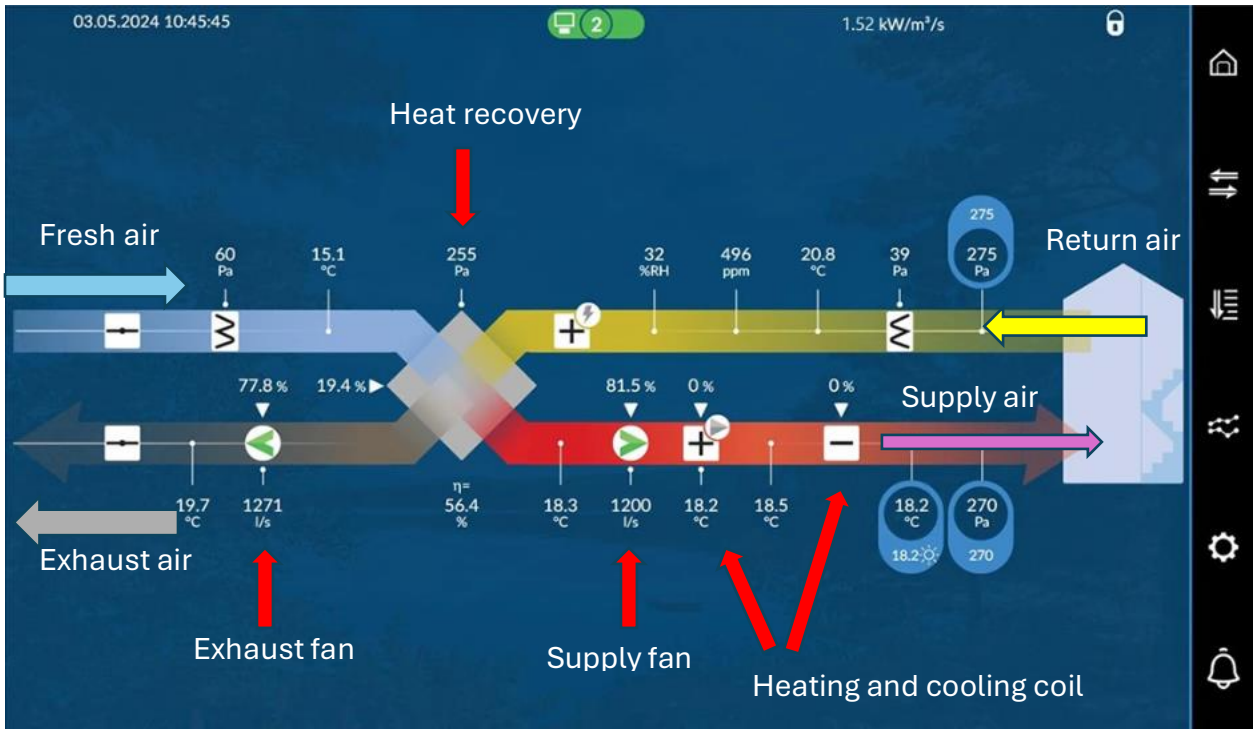

Energy Use and Efficiency

Energy is primarily used for:

- Heating (boiler)
- Cooling (chiller)
- Air movement (fans)
- Water circulation (pumps)

Efficiency is improved by:

- Demand-based ventilation and conditioning
- Proper coordination between DOAS, FCUs, and plant system

Evaluation criteria

Energy:

Energy performance is evaluated by the total annual energy consumption, including electricity use and heating energy (gas).

Indoor thermal comfort:

Indoor temperature conditions are evaluated according to the indoor climate classification categories S1, S2 and S3.

Indoor air quality:

Indoor air quality is assessed based on carbon dioxide (CO_2) concentrations. The evaluation follows the same climate classification categories S1, S2 and S3, and uses an outdoor reference concentration of 420 ppm.

Each model is evaluated using total cost.

Energy cost is computed from simulated electricity and gas consumption using fixed tariffs (electricity: 0.11 €/kWh, gas: 0.06 €/kWh).

CO_2 penalty is assessed per zone and per hour based on exceedance severity:

- Above S1 limit (770 ppm) but within S2: 2 €/h
- Above S2 limit (970 ppm) but within S3: 10 €/h
- Above S3 limit (1220 ppm): 50 €/h

Temperature penalty is assessed per zone and per hour based on the achieved indoor climate class (Finnish classification S1/S2/S3):

- Outside S1 but inside S2 : 1 €/h
- Outside S2 but inside S3 : 5 €/h
- Outside S3 : 25 €/h

Lower total cost indicates better overall performance balancing energy efficiency and indoor environmental quality.

Condition (t_out)	S1	S2	S3
Target Indoor Temperature			
t_out ≤ 0	21.5 °C	21.5 °C	
0 < t_out ≤ 20	21.5 + 0.15 · t_out	21.5 + 0.20 · t_out	
t_out > 20	24.5 °C	25.5 °C	
Allowed Upper Deviation (Upper Limit)			
t_out ≤ 0	22.0 °C	23.0 °C	
0 < t_out ≤ 15	22.5 + 0.166 · t_out	23.0 + 0.20 · t_out	
t_out > 15	25.0 °C	26.0 °C	
Allowed Lower Deviation (Lower Limit)			
t_out ≤ 0	20.5 °C	20.5 °C	
0 < t_out ≤ 20	20.5 + 0.075 · t_out	20.5 + 0.025 · t_out	
t_out > 20	22.0 °C	21.0 °C	
Maximum Temperature Limit			
t_out ≤ 0	23.0 °C	23.0 °C	
0 < t_out ≤ 20	23.0 + 0.20 · t_out	23.0 + 0.20 · t_out	
t_out > 15	27.0 °C	27.0 °C	
t_out ≤ 10			25.0 °C
t_out > 10			27.0 °C
Minimum Temperature Limit			
	20.0 °C	20.0 °C	20.0 °C
CO2 above outdoor air (fixed outdoor air CO2: 420 ppm)	< 350 ppm	< 550 ppm	< 800 ppm

Taulukko 1.3.1. Operatiivisen lämpötilan tavoitearvot eri sisäilmastoluokissa.

	S1	S2	S3
Operatiivinen lämpötila t_{op} [°C]			
$t_u \leq 0$ °C	21,5 [1]	21,5	
$0 < t_u \leq 20$ °C	$21{,}5+0{,}15 \times t_u$ [1]	$21{,}5+0{,}2 \times t_u$	
$t_u > 20$ °C	24,5 [1]	25,5	
Lämpötilan sallittu vaihteluväli [°C] poikkeama ylöspäin			
$t_u \leq 0$ °C	< 22,5	< 23	
$0 < t_u \leq 15$ °C	$< 22{,}5+0{,}166 \times t_u$	$< 23+0{,}2 \times t_u$	
$t_u > 15$ °C	< 25	< 26	
Lämpötilan sallittu vaihteluväli [°C] poikkeama alaspäin			
$t_u \leq 0$ °C	> 20,5	> 20,5	
$0 < t_u \leq 20$ °C	$> 20{,}5+0{,}075 \times t_u$	$> 20{,}5+0{,}025 \times t_u$	
$t_u > 20$ °C	> 22	> 21	
Operatiivisen lämpötilan enimmäisarvo [°C]			
$t_u \leq 0$ °C	< 23	< 23	
$0 < t_u \leq 20$ °C	$< 23+0{,}2 \times t_u$	$< 23+0{,}2 \times t_u$	
$t_u > 15$ °C	< 27	< 27	
$t_u \leq 10$ °C			< 25 (26) [2]
$t_u > 10$ °C			< 27 (32) [2]
Operatiivisen lämpötilan vähimmäisarvo [°C]	> 20	> 20	> 20 (18) [2]
Olosuhteiden pysyvyys [% käyttöajasta]			
– toimi- ja opetustilat	90 %	90 %	
– asunnot	90 %	80 %	

[1] S1-luokassa operatiivisen lämpötilan on oltava tila-/huoneistokohtaisesti aseteltavissa välillä t_{op} ±1,5 °C. Jos samassa huoneessa on useita henkilöitä, käytetään lämpötilan tavoitetasona taulukossa esitettyjä tavoitearvoja.

[2] Suluissa ovat Asumisterveysasetuksen mukaiset toimenpiderajat.

Taulukko 1.3.3. Sisäympäristön laadun tavoitearvot.

	S1	S2	S3
Hiilidioksidipitoisuuslisä * [ppm]	< 350	< 550	< 800
Radonpitoisuus [Bq/m³]	< 100	< 100	< 200
$PM_{2,5}$ [µg/m³]	< 10	< 10	< 25
$PM_{2,5}$ sisällä/ulkona	< 0,5	< 0,7	-
Ilman suhteellinen kosteus [% RH]	-	-	-
Olosuhteiden pysyvyys [% käyttöajasta]			
– toimi- ja opetustilat	90 %	90 %	-
– asunnot	90 %	80 %	-

* suurempi kuin ulkoilman hiilidioksidipitoisuus

EnergyPlus

What is EnergyPlus?

https://energyplus.net/downloads

https://energyplus.readthedocs.io/en/latest/index.html

- Building energy simulation engine
- Open-source software
- Simulates physical behavior of buildings
    - energy consumption
    - indoor temperatures
    - ventilation
    - HVAC system performance

Used for analyzing energy efficiency and indoor environmental conditions.

Building Models

- Building is defined using an **IDF file**
- Contains:
    - geometry
    - thermal zones
    - internal loads
    - constructions
    - HVAC systems
- Includes all essential information about the building and systems
- Uses an **EPW weather file**:
    - real-world weather data
    - enables realistic simulation conditions
- Simulation timestep: **15 minutes**

EnergyPlus Python API - https://energyplus.readthedocs.io/en/latest/api.html

The API allows control and interaction with the simulation using Python.

- **`api.functional`**
    - Static functions (e.g. thermophysical properties)
- **`api.runtime`**
    - Register Python functions as callbacks
    - Executed during simulation at specific stages
- **`api.exchange`**
    - Read simulation data (sensors)
    - Set actuator values (controls)
    - Used inside callback functions

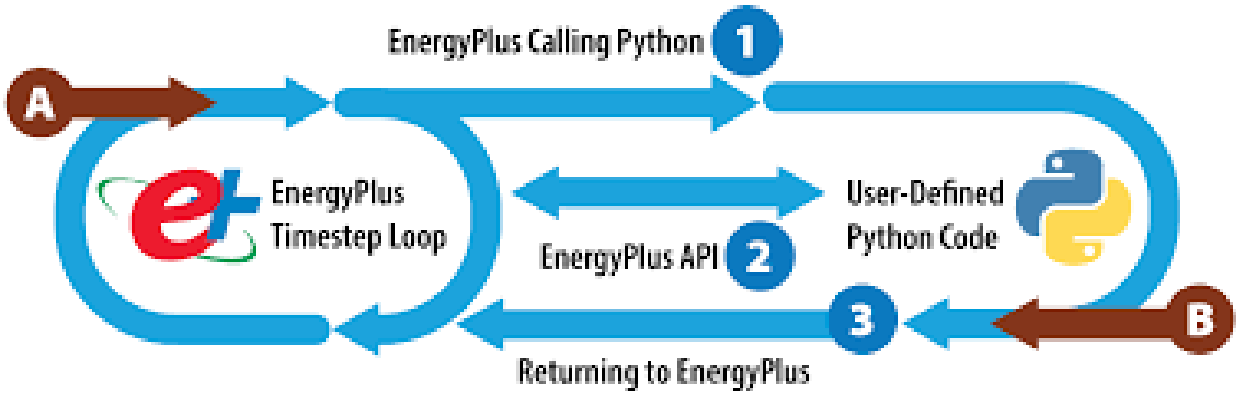

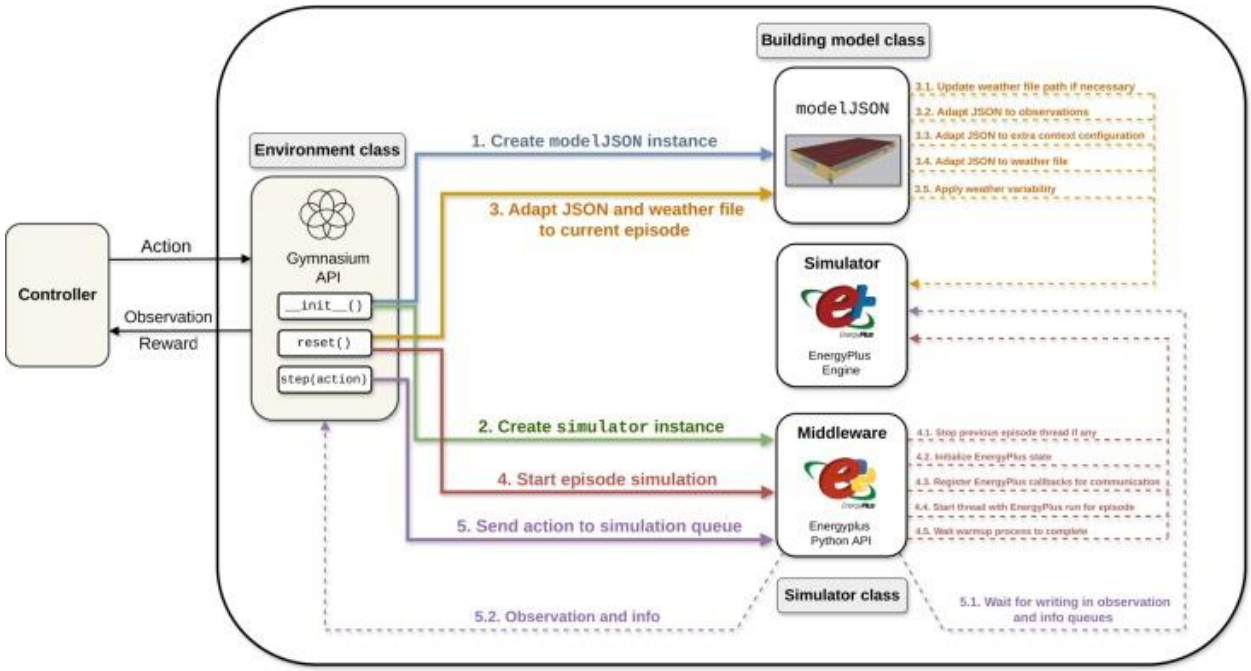

Download Python:

https://www.python.org/downloads/release/python-31210/

Help for running the Jupyter Notebooks:

https://code.visualstudio.com/docs/datascience/jupyter-notebooks

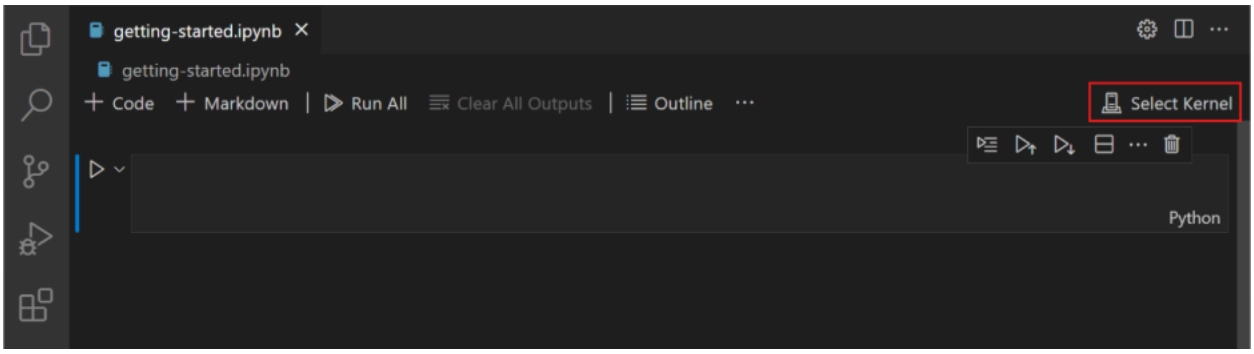
getting-started.ipynb
getting-started.ipynb
Code
Markdown
Run All
Clear All Outputs
Outline
Select Kernel
Python

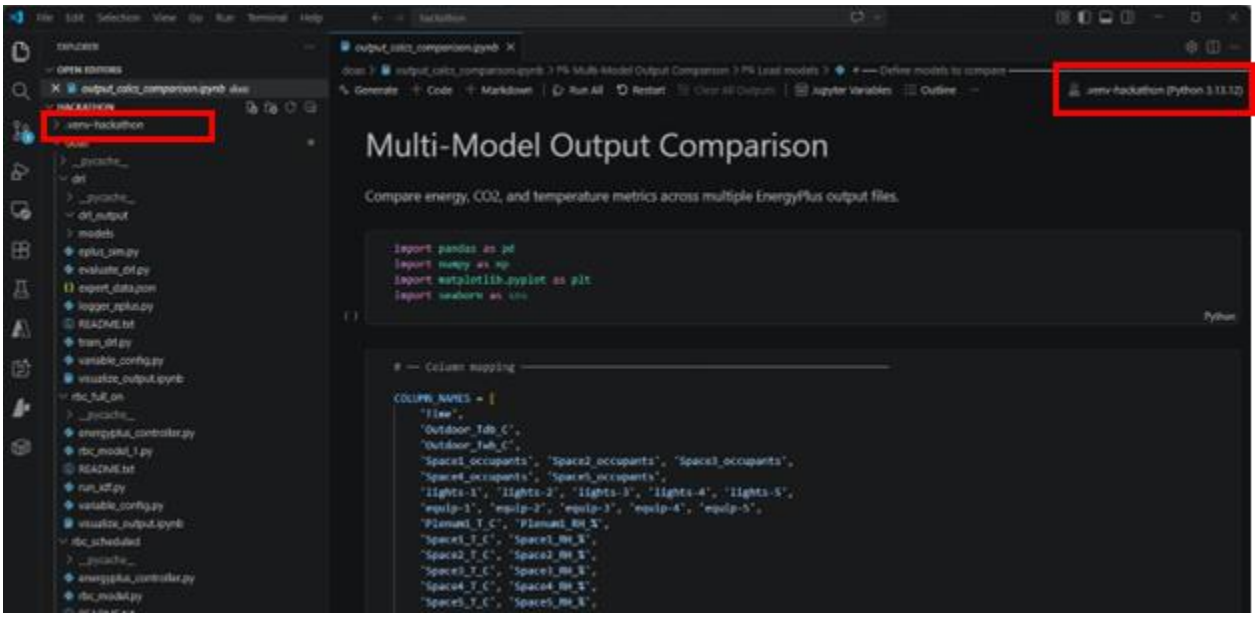
Multi-Model Output Comparison
Compare energy, CO2, and temperature metrics across multiple EnergyPlus output files.